深圳科盈电子有限公司
QUAWIN ELECTRONICS CO., LTD

interchangeable plug Adapter EU/US/UK/AU/CN standard 24V 1.5a power supply

Quick Detail:

Brand Name:QUAWIN/OEM
Model Number:QW240-015-AI
Use:Wall-mounted Adapter,Interchangeable plugs,Desktop Power Supplies,Type C charger, Quick Charger,Car Charger and Wireless Charger.
Type:Electric
Place of Origin:Guangdong China (Mainland)
Certificate:CE GS UL CB FCC SAA RCM PSE KC CCC Approvals
AC Plug:EU/US/UK/AU/CN standard
Color:Black/White
Input voltage:90-264VAC 47/63Hz
Output voltage:24V
Output current:1.5A
Output power:36W
Ripple & noise:240mV
Output Regulation:±5%
Energy Efficiency:LEVEL VI
Safeties Standard:60950/ 60335/ 61558/ 60065
Output connector:1.2m/1.5m/1.8m Wire
Operating Temperature:0℃ ~ +55℃
Storage Temperature:-20℃~+80%℃
Dimension :97.1 * 45.1 * 32mm
Humidity:5~95%RH(non-condensing)
Primary to Secondary:50MΩ Min
Ripple and Noise:100mVp-p Max

Packaging & Delivery :

inner package: Industrial Packing Carton Size: 47*36.5*19 cm 50 pcs Per Carton
(Customized Packing To Be Acceptable)
Delivery Detail:sample within 5 work days,7~25 days for bulk order

Safety protections:

- Over Voltage protection
- Short Circuit protection
- Input protection
- Compliance with ROHS requirements

ADD:6/F,Bldg.16,Wangtang Industrial Zone,XinWei Village,Xili Town of Nanshan District,Shenzhen
WEB：www.quawin.com
TEL:86-755-86277191/86277197
FAX:86-755-86277151

深圳科盈电子有限公司
QUAWIN ELECTRONICS CO., LTD

Typical model	Output Voltage	Output Current	Ripple & noise	Efficiency
QW050-050-AI	5V	5000mA	50mV	VI
QW090-050-AI	9V	5000mA	90mV	
QW120-030-AI	12V	3000mA	120mV	
QW120-040-AI	12V	4000mA	120mV	
QW150-030-AI	15V	3000mA	150mV	
QW240-015-AI	24V	1500mA	240mV	
QW240-020-AI	24V	200mA	240mV	



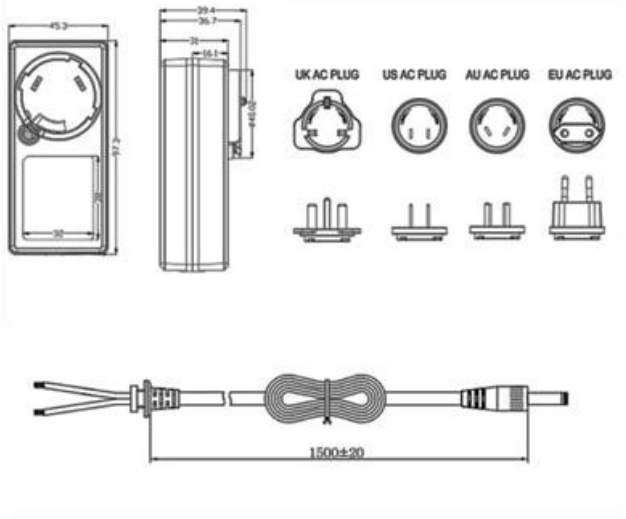

ADD:6/F,Bldg.16,Wangtang Industrial Zone,XinWei Village,Xili Town of Nanshan District,Shenzhen
WEB：www.quawin.com
TEL:86-755-86277191/86277197
FAX:86-755-86277151

深圳科盈电子有限公司
QUAWIN ELECTRONICS CO.. LTD



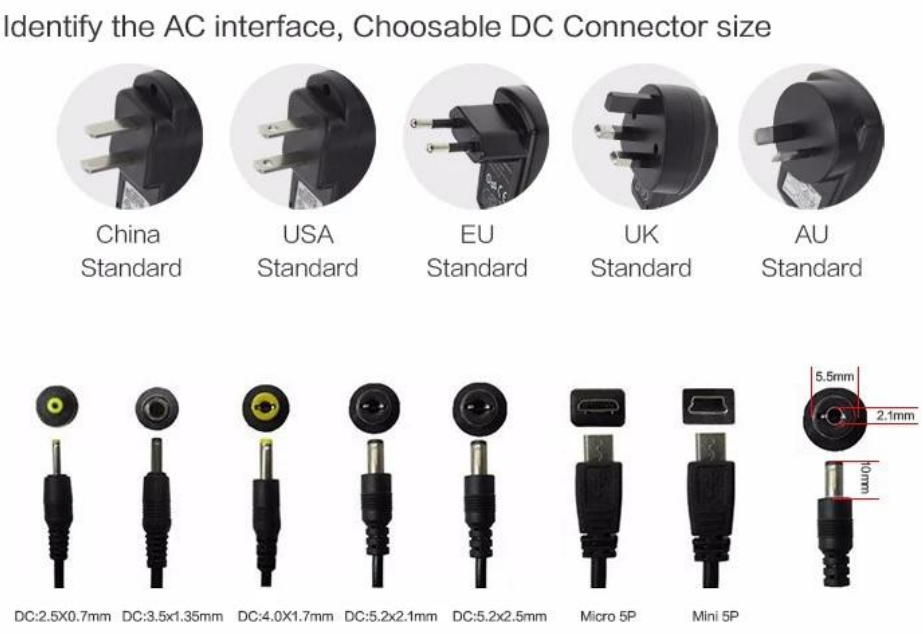

ADD:6/F,Bldg.16,Wangtang Industrial Zone,XinWei Village,Xili Town of Nanshan District,Shenzhen
WEB：www.quawin.com
TEL:86-755-86277191/86277197
FAX:86-755-86277151

深圳科盈电子有限公司
QUAWIN ELECTRONICS CO., LTD

Universal DC OD5.5mm standard interface

5.5mm DC interface | 2.1mm Inner size | 150cm Line length



Efficient Anti – Interference Magnetic ring

Effectively reduce the EMI electromagnetic interference, to ensure stable current output



OUR COMPANY



Front desk



Exhibition



Sales Department



Production operation



Workshop



Production equipment



Warehouse



SMT



Aging room

ADD:6/F,Bldg.16,Wangtang Industrial Zone,XinWei Village,Xili Town of Nanshan District,Shenzhen
WEB：www.quawin.com
TEL:86-755-86277191/86277197
FAX:86-755-86277151

深圳科盈电子有限公司
QUAWIN ELECTRONICS CO., LTD

OUR CERTIFICATE



















ADD:6/F,Bldg.16,Wangtang Industrial Zone,XinWei Village,Xili Town of Nanshan District,Shenzhen
WEB：www.quawin.com
TEL:86-755-86277191/86277197
FAX:86-755-86277151